KOBAYASHI

WORKFLOW ENGINEERING

2027 EDITION

TRADE CATALOGUE

For Those Who Raise The Bar

SCAN TO SHOP ALL EQUIPMENT

KOBAYASHIBAR.COM



CONTENTS

01	BAR STATIONS	03
02	PORTABLE STATIONS	11
03	DRINK RAILS	13
04	DRIP, BEER AND COFFEE TRAYS	16
05	REFRIGERATION	18
06	ACCESSORIES	22
07	CLIENT INSTALLATIONS	24
08	PRICING AND ORDERING	26

MODEL NUMBERS

Every product has one. Use it on drawings, equipment schedules and quote requests.

SPEC SHEETS

Scan the QR code on a product page for its full spec and installation sheet.

FREE BAR LAYOUT

Send your floor plan. We lay out the bar and quote it.



KOBAYASHI
WORKFLOW ENGINEERING

SECTION

01

BAR STATIONS

Ice, bottles, tools and the glass rinser within one step of the bartender. Three lengths, standalone or drop-in.

IN THIS SECTION

THE STATION RANGE	04
88″ STANDALONE	05
65″ STANDALONE	06
52″ STANDALONE	07
65″ DROP-IN	08
52″ DROP-IN	09
STATION ANATOMY	10



THE STATION RANGE

Five stations, one workflow. Pick the length by crew size and guest count, then the format by how the bar is built.

Standalone stands on its own legs between bar elements and can go portable.

Drop-in sets into a countertop cutout and rests on its edge lip.



KC-88-S1

88″ STANDALONE

RETAIL PRICE
$9,250

SIZE (L × W × H)
87.80″ × 23.62″ × 38.78″

ICE CHEST
168 L

SPEED RAIL
11-12 bottles

GUESTS
150-200+

BARTENDERS
2-4

SPEC PAGE
05



KC-65-S1

65″ STANDALONE

RETAIL PRICE
$7,500

SIZE (L × W × H)
65″ × 23.62″ × 38.78″

ICE CHEST
168 L

SPEED RAIL
11-12 bottles

GUESTS
120-170

BARTENDERS
1-3

SPEC PAGE
06



KC-52-S1

52″ STANDALONE

RETAIL PRICE
$5,950

SIZE (L × W × H)
52″ × 23.62″ × 38.78″

ICE CHEST
135 L

SPEED RAIL
7-8 bottles

GUESTS
80-120

BARTENDERS
1-2

SPEC PAGE
07



KC-65-D1

65″ DROP-IN

RETAIL PRICE
$6,850

SIZE (L × W × H)
65″ × 23.62″ × 15.74″

ICE CHEST
168 L

SPEED RAIL
11-12 bottles

GUESTS
120-170

BARTENDERS
1-3

SPEC PAGE
08



KC-52-D1

52″ DROP-IN

RETAIL PRICE
$5,590

SIZE (L × W × H)
52″ × 23.62″ × 15.74″

ICE CHEST
135 L

SPEED RAIL
7-8 bottles

GUESTS
80-120

BARTENDERS
1-2

SPEC PAGE
09

All stations: 304 stainless steel, 16-gauge. Dimensions from spec sheets dated 2026-10-29.

MODEL KC-88-S1

88″ STANDALONE BARTENDER STATION

Built for the busiest bars: two full rinse units and room for up to four bartenders on one station.





TOP VIEW

PRODUCT SPECIFICATIONS

2230 × 600 × 985 MM
87.80″ × 23.62″ × 38.78″

226 KG / 500 LB

TOTAL ICE CHEST CAPACITY
168 L / 5,680 FL OZ / 44.38 GAL
About 328 lb / 149 kg of usable ice

11-12 SPEED RAIL BOTTLES
+2 with BottleStep · Up to 30 bottles with FlexDock maxed

~300 SERVINGS PER ICE CHEST
Serves 150-200+ guests · 2-4 bartenders

INSTALLATION

Cutout / clearance	2235 × 605 mm 87.99″ × 23.82″
Side clearance	3-5 mm (1/8″-1/4″) all sides
Utility space	150 mm / 5.91″ in the bar wall behind
Faucet clearance	115 mm / 4.45″ below any overhang
Bar top height	Max. 1110 mm / 45.00″ recommended
Drains	2″, pre-installed, IPC and UPC
Water	Cold + warm; cold only to rinsers
Power	110-120V, 60Hz, GFCI outlet

WHAT'S INCLUDED

- 168 L insulated ice chest, garnish rail (up to 9 × GN 1/9), 3 dividers, drip rosters
- 3-piece ice chest cover set included
- Full-length speed rail and SpeedCounter staging
- BarTool unit with tool roster and divider
- FlexDock with BottleStep and blend unit dock
- Rinse units: 2 faucets, 4 glass rinsers, dump container, 2 cutting boards
- FlexRail glass staging and waste drawer
- Reinforced legs with adjustable feet
- Dual drain with lockable valves

Faucet and garnish trays are NSF-certified components.

SPEC AND INSTALL SHEET

OPTIONS

PORTABLE CONVERSION KIT

DRINK RAIL | LASER-CUT LOGO

304 stainless steel, 16-gauge. Lifetime structural guarantee. Ships crated on a pallet by LTL freight.

MODEL KC-65-S1

65" STANDALONE BAR STATION

Full 168 L ice chest in a mid-length footprint. The all-rounder for restaurant and hotel bars.





TOP VIEW

PRODUCT SPECIFICATIONS

1651 × 600 × 985 MM
65" × 23.62" × 38.78"

180 KG / 400 LB

TOTAL ICE CHEST CAPACITY
168 L / 5,680 FL OZ / 44.38 GAL
About 328 lb / 149 kg of usable ice

11-12 SPEED RAIL BOTTLES
+2 with BottleStep · Up to 21 bottles with FlexDock maxed

~300 SERVINGS PER ICE CHEST
Serves 120-170 guests · 1-3 bartenders

INSTALLATION

Cutout / clearance	1656 × 605 mm 65.20" × 23.82"
Side clearance	3-5 mm (1/8"-1/4") all sides
Utility space	150 mm / 5.91" in the bar wall behind
Faucet clearance	115 mm / 4.45" below any overhang
Bar top height	Max. 1110 mm / 45.00" recommended
Drains	2", pre-installed, IPC and UPC
Water	Cold + warm; cold only to rinsers
Power	110-120V, 60Hz, GFCI outlet

WHAT'S INCLUDED

- 168 L insulated ice chest, garnish rail (up to 9 × GN 1/9), 2 dividers, drip rosters
- Dual-section speed rail and SpeedCounter staging
- BarTool unit with tool roster and divider
- FlexDock with BottleStep and blend unit dock
- Rinse unit: faucet, 2 glass rinsers, dump container, cutting board
- FlexRail glass staging and waste drawer
- Reinforced legs with adjustable feet
- Drain with lockable valve

Faucet and garnish trays are NSF-certified components.

SPEC AND INSTALL SHEET

OPTIONS

PORTABLE CONVERSION KIT

DRINK RAIL

3-PIECE ICE CHEST COVER

LASER-CUT LOGO

304 stainless steel, 16-gauge. Lifetime structural guarantee. Ships crated on a pallet by LTL freight.

MODEL KC-52-S1

52" STANDALONE COCKTAIL STATION

The compact station for craft cocktail bars, wine bars and tight back-of-house runs.





TOP VIEW

PRODUCT SPECIFICATIONS

1325 × 600 × 985 MM
52" × 23.62" × 38.78"

114 KG / 251 LB

TOTAL ICE CHEST CAPACITY
135 L / 4,565 FL OZ / 35.66 GAL
About 222 lb / 101 kg of usable ice

7-8 SPEED RAIL BOTTLES
+2 with BottleStep · Up to 18 bottles with FlexDock maxed

~200 SERVINGS PER ICE CHEST
Serves 80-120 guests · 1-2 bartenders

INSTALLATION

Cutout / clearance	1330 × 605 mm 52.36" × 23.82"
Side clearance	3-5 mm (1/8"-1/4") all sides
Utility space	150 mm / 5.91" in the bar wall behind
Faucet clearance	115 mm / 4.45" below any overhang
Bar top height	Max. 1110 mm / 45.00" recommended
Drains	2", pre-installed, IPC and UPC
Water	Cold + warm; cold only to rinsers
Power	110-120V, 60Hz, GFCI outlet

WHAT'S INCLUDED

- 135 L insulated ice chest, garnish rail (6 × GN 1/9), divider, drip rosters
- Integrated speed rail and SpeedCounter staging
- BarTool unit with tool roster and divider
- FlexDock with BottleStep and blend unit dock
- Rinse unit: faucet, 2 glass rinsers, dump container, cutting board
- FlexRail glass staging and waste drawer
- Reinforced legs with adjustable feet
- Drain with lockable valve

Faucet and garnish trays are NSF-certified components.

SPEC AND INSTALL SHEET

OPTIONS

PORTABLE CONVERSION KIT

DRINK RAIL

2-PIECE ICE CHEST COVER

LASER-CUT LOGO

304 stainless steel, 16-gauge. Lifetime structural guarantee. Ships crated on a pallet by LTL freight.

MODEL KC-65-D1

65" DROP-IN BAR STATION

The 65" workflow set into your own millwork. Sits in a countertop cutout on a 25 mm edge lip.





TOP VIEW

PRODUCT SPECIFICATIONS

1651 × 600 × 400 MM
65" × 23.62" × 15.74"

93 KG / 205 LB

TOTAL ICE CHEST CAPACITY
168 L / 5,680 FL OZ / 44.38 GAL
About 328 lb / 149 kg of usable ice

11-12 SPEED RAIL BOTTLES
+2 with BottleStep · Up to 21 bottles with FlexDock maxed

~300 SERVINGS PER ICE CHEST
Serves 120-170 guests · 1-3 bartenders

INSTALLATION

Cutout	1610 × 605 mm 63.39" × 23.82"
Edge lip	25 mm / 0.98", rests on the bar surface
Base	Min. 3/4" exterior-grade MDO plywood
Side clearance	3-5 mm (1/8"-1/4") all sides
Utility space	150 mm / 5.91" in the bar wall behind
Drains	2", pre-installed, IPC and UPC
Water	Cold + warm; cold only to rinsers
Power	110-120V, 60Hz, GFCI outlet

WHAT'S INCLUDED

- 168 L insulated ice chest, garnish rail (up to 9 × GN 1/9), 2 dividers, drip rosters
- Dual-section speed rail and SpeedCounter staging
- BarTool unit with tool roster and divider
- FlexDock with BottleStep and blend unit dock
- Rinse unit: faucet, 2 glass rinsers, dump container, cutting board
- FlexRail glass staging and waste drawer
- Drop-in mounting kit
- Drain with lockable valve

Faucet and garnish trays are NSF-certified components.

SPEC AND INSTALL SHEET

OPTIONS

DRINK RAIL

3-PIECE ICE CHEST COVER

LASER-CUT LOGO

304 stainless steel, 16-gauge. Lifetime structural guarantee. Ships crated on a pallet by LTL freight.

MODEL KC-52-D1

52" DROP-IN MIXOLOGY STATION

The compact drop-in for cocktail programs built into custom bar fronts and islands.





TOP VIEW

PRODUCT SPECIFICATIONS

1325 × 600 × 400 MM
52" × 23.62" × 15.74"

70 KG / 154 LB

TOTAL ICE CHEST CAPACITY
135 L / 4,565 FL OZ / 35.66 GAL
About 222 lb / 101 kg of usable ice

7-8 SPEED RAIL BOTTLES
+2 with BottleStep · Up to 18 bottles with FlexDock maxed

~200 SERVINGS PER ICE CHEST
Serves 80-120 guests · 1-2 bartenders

INSTALLATION

Cutout	1285 × 580 mm 50.59" × 22.83"
Edge lip	25 mm / 0.98", rests on the bar surface
Base	Min. 3/4" exterior-grade MDO plywood
Side clearance	3-5 mm (1/8"-1/4") all sides
Utility space	150 mm / 5.91" in the bar wall behind
Drains	2", pre-installed, IPC and UPC
Water	Cold + warm; cold only to rinsers
Power	110-120V, 60Hz, GFCI outlet

WHAT'S INCLUDED

- 135 L insulated ice chest, garnish rail (6 × GN 1/9), divider, drip rosters
- Integrated speed rail and SpeedCounter staging
- BarTool unit with tool roster and divider
- FlexDock with BottleStep and blend unit dock
- Rinse unit: faucet, 2 glass rinsers, dump container, cutting board
- FlexRail glass staging and waste drawer
- Drop-in mounting hardware
- Drain with lockable valve

Faucet and garnish trays are NSF-certified components.

SPEC AND INSTALL SHEET

OPTIONS

DRINK RAIL

2-PIECE ICE CHEST COVER

LASER-CUT LOGO

304 stainless steel, 16-gauge. Lifetime structural guarantee. Ships crated on a pallet by LTL freight.

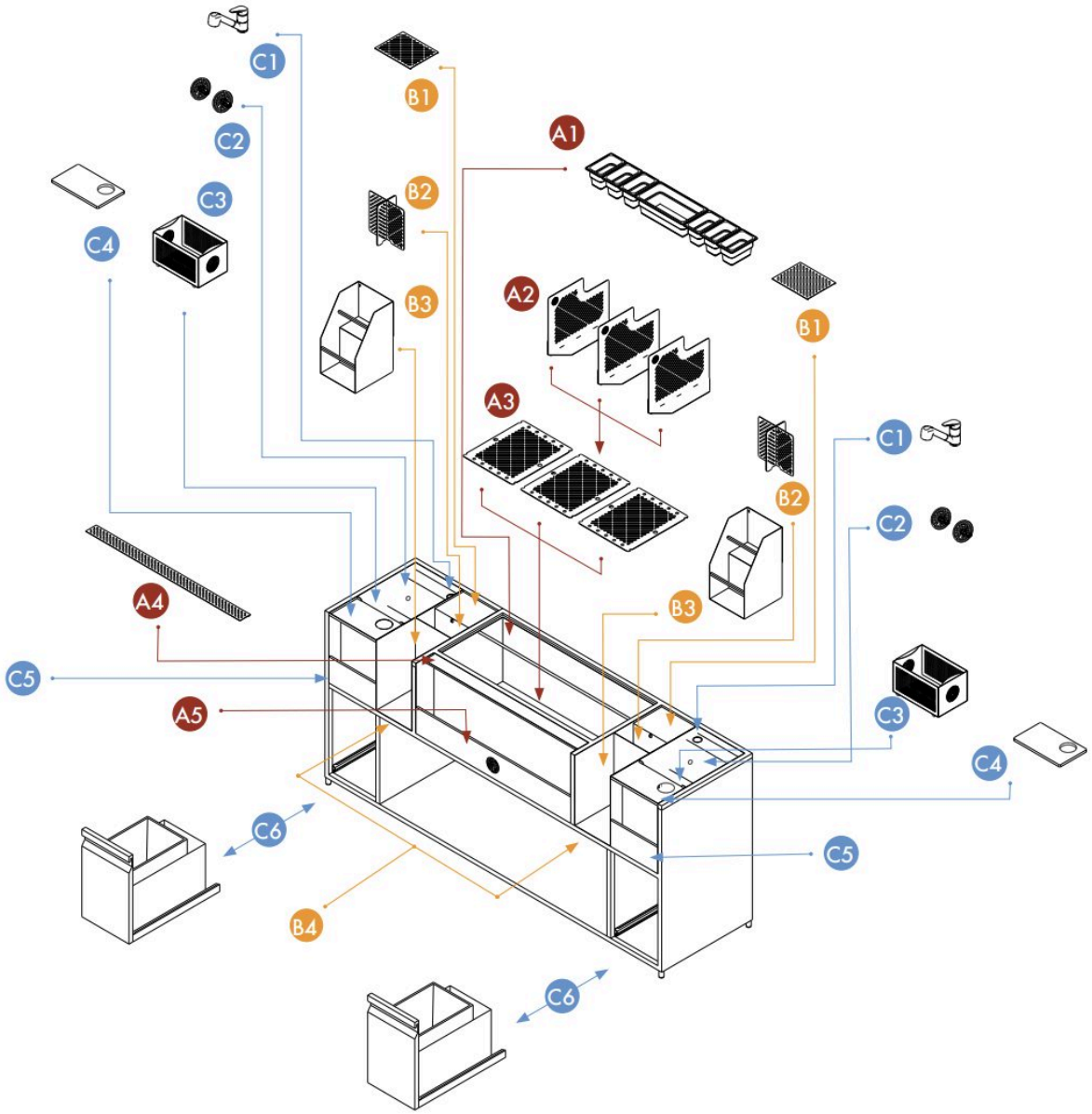

STATION ANATOMY

Every station is built from the same three working zones, so bartenders find everything in the same place on every model.

A · OPERATIONAL

ICE CHEST AND POUR

A1 Garnish rail
A2 Ice chest divider
A3 Drip roster
A4 SpeedCounter
A5 Speed rail

B · SUPPORT

BARTOOL UNIT AND FLEXDOCK

B1 Bartool roster
B2 Bartool divider
B3 BottleStep
B4 Blend unit dock

C · PREP

RINSE UNIT

C1 Faucet
C2 Glass rinser
C3 Container
C4 Cutting board
C5 FlexRail
C6 Waste drawer (standalone models)

KOBAYASHI
WORKFLOW ENGINEERING

SECTION

02

PORTABLE STATIONS

Any standalone station on locking castors with its own water and waste tanks. Plug the pump into a 110V outlet and pour.



IN THIS SECTION

PORTABLE RANGE AND KIT 12

PORTABLE RANGE

The same 52″, 65″ and 88″ standalone stations, fitted with the portable conversion kit. Same 304 stainless body, same workflow, no plumbing.







KC-52-S1 + PORTABLE KIT

52″ PORTABLE

Water tank	20 gal
Waste tank	20 gal
Serves	80-120 guests · 1-2 bartenders

KC-65-S1 + PORTABLE KIT

65″ PORTABLE

Water tank	20 gal
Waste tank	40 gal
Serves	120-170 guests · 1-3 bartenders

KC-88-S1 + PORTABLE KIT

88″ PORTABLE

Water tank	20 gal
Waste tank	40 gal
Serves	150-200+ guests · 2-4 bartenders

Station dimensions, ice capacity and included parts are the same as the standalone spec pages (05 to 07).

PORTABLE CONVERSION KIT

ACC-PORTABLE-CONV

- 4 heavy-duty locking castors, each rated 1,000 lb
- Integrated water tank feeds the glass rinser
- Integrated waste tank catches drain output
- Electric water pump on a standard 110V outlet
- Plumbing pre-assembled and tested before shipping

GOOD TO KNOW

- Adds about 2 weeks to the station build
- Kit parts carry a 2-year warranty; the station keeps its lifetime structural guarantee
- Built for hotels, events, breweries and pop-ups, indoors or out
- Prefer it plumbed? Order the standalone without the kit

PORTABLE BARS ONLINE

Configure a portable station and see it in 3D

KOBAYASHI
WORKFLOW ENGINEERING

SECTION

03

DRINK RAILS

A drained, stainless pour zone along the bar top. Four lengths, two widths, cut to size and logo-ready.

IN THIS SECTION

LENGTHS AND WIDTHS	14
INSTALLATION AND CUSTOM	15



STAINLESS DRINK RAILS

A full-length drained grate that keeps spills, melt and condensation off the bar top. Sized to end exactly where the station does.



STANDARD FACE · 4.72″ / 120 MM WIDE



WIDE FACE · 8.00″ / 203 MM WIDE, ONE PIECE

MODELS

Length	Standard 4.72″	Wide 8″	Pairs with	Retail price
39.37″ (1000 mm)	KC-39-DR	KC-39-DR8	Any station or bar top	$500 / $1,000
52.17″ (1325 mm)	KC-52-DR	KC-52-DR8	52″ stations	$650 / $1,300
65″ (1651 mm)	KC-65-DR	KC-65-DR8	65″ stations	$850 / $1,700
88″ (2235 mm)	KC-88-DR	KC-88-DR8	88″ stations	$1,000 / $2,000

Retail price shown as standard / wide. **Corner rail:** 90° L-shape with 29.5″ legs, $950. **Custom lengths:** cut to the millimetre for your bar.

SPECIFICATIONS

Height	0.79″ / 20 mm
Material	304 stainless, 14 gauge, approx. 0.075″ thick
Finish	Brushed, diagonal slot grate
Drain	1/2″ outlet, pre-piped to the underside
Codes	IPC and UPC compatible
Mounting	Surface mount or flush inset
Guarantee	Lifetime structural

Dimensions from the Kobayashi drink rail spec and install sheets. Subject to change.

TWO WAYS TO INSTALL

01 · SURFACE MOUNT

Sits on the finished bar top. The fastest retrofit.

- Position the rail on the bartender side
- Drill one hole under the 1/2″ drain port
- Seal the base with food-grade silicone
- Connect the drain to the plumbing line

02 · FLUSH INSET

Cut into the bar top so the lip sits level. Cleanest for new builds.

- Trace the rail outline and cut the opening
- Drill for the 1/2″ drain below the port
- Run silicone around the cutout perimeter
- Drop in, bracket underneath, connect

HOW TO MEASURE

01
Mark the start and end of the bartender work zone.

02
Match the run to the closest length, or order custom.

03
Check taps, POS and conduit clear the rail footprint.

04
Confirm the guest overhang, typically 10-12″.



YOUR LOGO IN THE RAIL

Your logo laser cut into the rail face. One setup fee per order, however many rails it goes on.





SPEC AND INSTALL SHEETS
All eight drink rail sheets, plus the 3D rail planner

KOBAYASHI
WORKFLOW ENGINEERING

SECTION

04

DRIP, BEER AND COFFEE TRAYS

Flush-mount stainless trays with laser-cut rosters. One square tray for glass landing, one long tray for taps or espresso.

IN THIS SECTION

TRAY RANGE 17

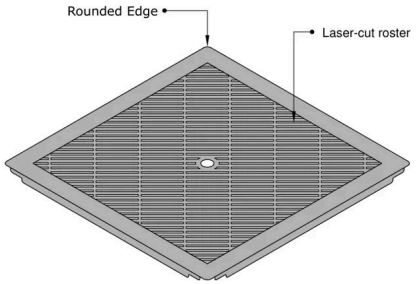

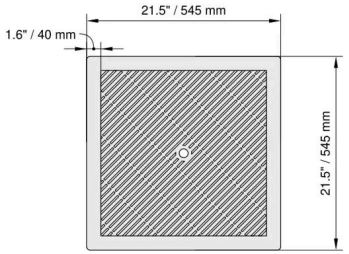

Product: Drip Tray 23.6" x 23.6" x 0.8" (600 x 600 x 20 mm)

Stainless Steel 304
Thickness: 0.08" (2 mm)
Drain size: 1/2" (20 mm)

Custom laser-cut logo available on the roster

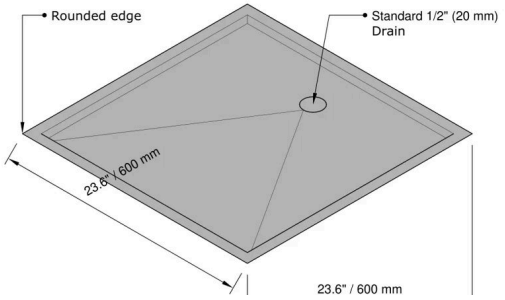

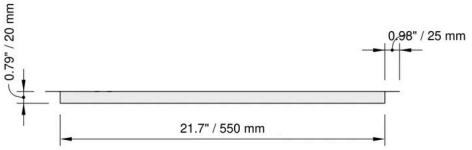

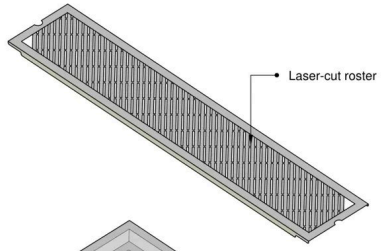

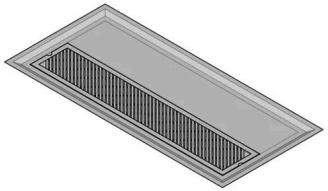

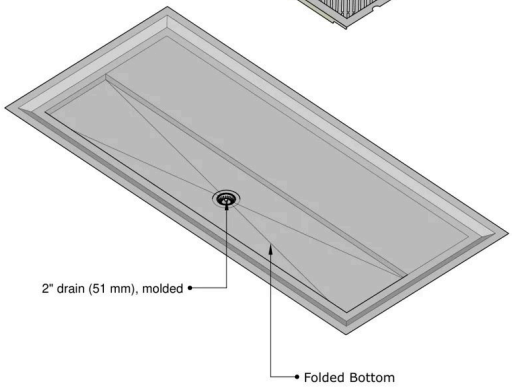

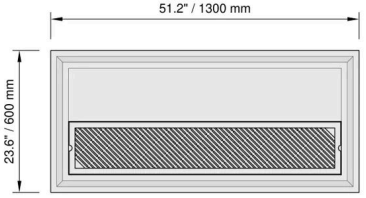

Product: Beer & Coffee Drip Tray 51.2" x 23.6" x 1.3" (1300 x 600 x 33 mm)

Stainless Steel 304
Thickness: 0.08" (2 mm)
Drain size: 2" (51 mm), molded
Custom laser-cut logo available on the roster

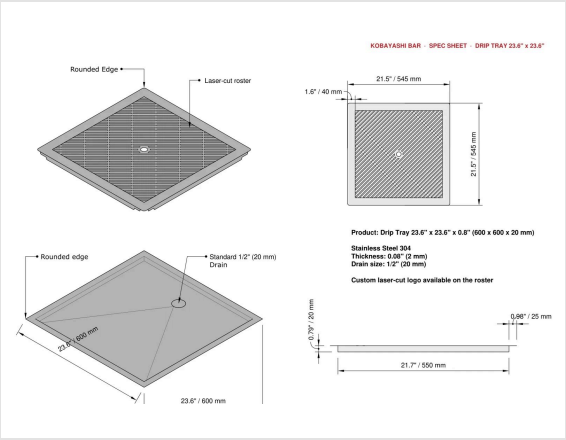

KC-DT600

DRIP TRAY 600

Retail price	$575
Outside size	23.6″ × 23.6″ (600 × 600 mm)
Depth	0.8″ (20 mm)
Top	Full laser-cut roster, 21.5″ square
Drain	1/2″ (20 mm), or none
Cutout body	21.7″ (550 mm) square, hangs on a 0.98″ flange

- Bar top glass landing and cocktail pickup
- Custom laser-cut logo available on the roster

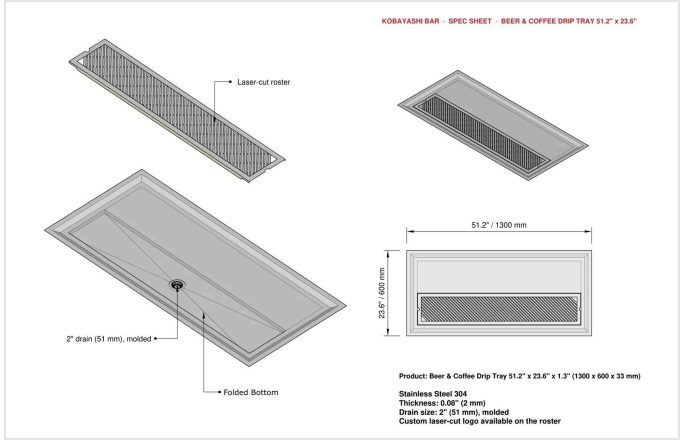

KC-DT1300

BEER AND COFFEE TRAY 1300

Retail price	$1,500, full grate +$500
Outside size	51.2″ × 23.6″ (1300 × 600 mm)
Depth	1.3″ (33 mm)
Top	Solid shelf for the tower or machine, roster for glasses or cups
Drain	2″ (51 mm) molded, or none
Full grate	Optional roster across the whole tray

- Beer taps and towers, espresso machines
- Folded bottom runs everything to the drain

ALL TRAYS

Material	304 stainless steel
Thickness	0.08″ (2 mm)
Edge	0.98″ rounded flange
Install	Flush mount in a counter cutout
Pairs with	Back bar fridges, drink rails, coffee stations

Cut the opening a hair larger than the tray body, never larger than the flange. Seal under the flange with food-grade silicone.

KC-DT600 SPEC SHEET
Drip Tray 600

KC-DT1300 SPEC SHEET
Beer and Coffee Tray 1300

Dimensions from the KC-DT600 and KC-DT1300 spec sheets. Subject to change.

KOBAYASHI
WORKFLOW ENGINEERING

SECTION

05

REFRIGERATION

Undercounter refrigerators and freezers at station depth, sized to sit under a 52″, 65″ or 88″ run.



IN THIS SECTION

UNDERCOUNTER REFRIGERATORS	19
BLACK METALLIC BAR COOLERS	20
UNDERCOUNTER FREEZERS	21



UNDERCOUNTER REFRIGERATORS

32 TO 50 °F / 0 TO 10 °C

Stainless cabinet, 23.62″ deep to match the station, 31.50″ high to clear a standard bar top. Glass doors, wire shelves, two per door.

Black Metallic bar coolers: 1 to 4 doors, see page 20. **Sizing:** 3 doors under an 88″ or 65″ station, 2 doors under a 52″.

STAINLESS MODELS

Model	Doors	Capacity	Exterior (W × D × H)	Interior	Net weight	Power	Retail price
KC-REF-900	1	180 L / 47.6 gal	35.43 × 23.62 × 31.50″ (900 × 600 × 800 mm)	450 × 400 × 580 mm	123.5 lb / 56 kg	280 W	$2,000
KC-REF-1200	2	290 L / 76.6 gal	47.24 × 23.62 × 31.50″ (1200 × 600 × 800 mm)	750 × 400 × 580 mm	156.5 lb / 71 kg	280 W	$2,500
KC-REF-1800	3	500 L / 132.1 gal	70.87 × 23.62 × 31.50″ (1800 × 600 × 800 mm)	1300 × 400 × 580 mm	224.9 lb / 102 kg	320 W	$3,000

ALL MODELS

Cooling	Air cooled, R290a refrigerant
Compressor	Embraco, mountable left or right
Supply	110-240V, 50-60Hz
Base	Feet (-F) or castor wheels (-W)
Plumbing	None required
Warranty	5 years parts and labor, 7 years compressor

ONLINE
Pick doors, finish and base



1 DOOR



2 DOOR



3 DOOR



4 DOOR

BLACK METALLIC BAR COOLERS

A dark cabinet for front-of-house bars. Glass doors, wire shelves, two per door, 1 to 4 doors.

BLACK METALLIC MODELS

Model	Doors	Shelves	Exterior (W × D × H)	Interior	Net weight	Power	Retail price
KC-REF-BLK-1D	1	2	35.43 × 21.26 × 33.07″ (900 × 540 × 840 mm)	400 × 355 × 610 mm	123.5 lb / 56 kg	280 W	$2,000
KC-REF-BLK-2D	2	4	47.24 × 21.26 × 33.07″ (1200 × 540 × 840 mm)	700 × 355 × 610 mm	156.5 lb / 71 kg	280 W	$2,500
KC-REF-BLK-3D	3	6	70.87 × 21.26 × 33.07″ (1800 × 540 × 840 mm)	1300 × 355 × 610 mm	224.9 lb / 102 kg	320 W	$3,000
KC-REF-BLK-4D	4	8	94.49 × 21.26 × 33.07″ (2400 × 540 × 840 mm)	1900 × 355 × 610 mm	Ask us	Ask us	$4,000

Finish	Black Metallic
Height	33.07″ (840 mm), taller than the stainless line
Depth	21.26″ (540 mm), shallower than a station

Base	Feet (-F) or wheels (-W)
Widths	35.43″ to 94.49″ wide
Fit check	Send the bar drawing and we confirm the opening

ONLINE
Pick doors, finish and base



UNDERCOUNTER FREEZERS

-4 TO 23 °F / -20 TO -5 °C

Stainless cabinet, 23.62″ deep to match the station, 31.50″ high to clear a standard bar top. Glass doors, wire shelves, two per door.

> Same footprint as the refrigerators, so a fridge and freezer line up under one bar run. Stainless only, 1 to 3 doors.

STAINLESS MODELS

Model	Doors	Capacity	Exterior (W × D × H)	Interior	Net weight	Power	Retail price
KC-FRZ-900	1	180 L / 47.6 gal	35.43 × 23.62 × 31.50″ (900 × 600 × 800 mm)	450 × 400 × 580 mm	123.5 lb / 56 kg	280 W	$2,495
KC-FRZ-1200	2	approx. 300 L / 79.3 gal	47.24 × 23.62 × 31.50″ (1200 × 600 × 800 mm)	750 × 400 × 580 mm	156.5 lb / 71 kg	280 W	$3,195
KC-FRZ-1800	3	approx. 540 L / 142.7 gal	70.87 × 23.62 × 31.50″ (1800 × 600 × 800 mm)	1350 × 400 × 580 mm	224.9 lb / 102 kg	320 W	$3,795

ALL MODELS

Cooling	Air cooled, R290a refrigerant
Compressor	Embraco, mountable left or right
Supply	110-240V, 50-60Hz

Base	Feet (-F) or castor wheels (-W)
Plumbing	None required
Warranty	5 years parts and labor, 7 years compressor

ONLINE
Pick doors and base

KOBAYASHI
WORKFLOW ENGINEERING

SECTION

06

ACCESSORIES

Covers, dividers, rinsers and your logo.
Everything that finishes a Kobayashi bar.

IN THIS SECTION

ACCESSORY RANGE 23



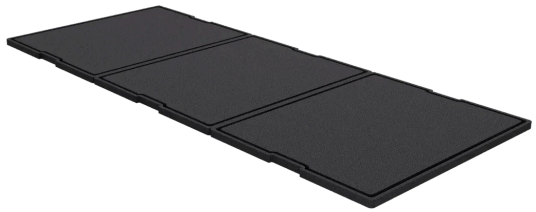

ACC-ICC-2PC · ACC-ICC

ICE CHEST COVERS

- 2-piece set for 52″ stations, 3-piece for 65″ and 88″
- Boards 340 × 422 mm (13.4″ × 16.6″), 1/2″ thick
- Juice groove around the full perimeter
- Included free with the 88″ station



ACC-ICD

ICE CHEST DIVIDER

- 15.75″ × 6.30″ × 13.15″ (400 × 160 × 334 mm)
- Splits the ice chest into ice and bottle zones
- Laser-cut 304 stainless



ACC-GR

GLASS RINSER

- Spare or extra rinser for any rinse unit
- Connects to cold water only



ACC-LOGO

LASER-CUT LOGO

- Your logo cut into the station, drink rail or tray roster
- One setup fee per order

ALSO IN THIS CATALOGUE

Portable conversion kit, page 12
Drink rails, pages 14 to 15
Drip, beer and coffee trays, page 17

BAR BUILDER
Add accessories to a full bar layout online



RH (RESTORATION HARDWARE), CLEVELAND



CONRAD BY HILTON, ORLANDO



PAPER PLANE, SAN JOSE



TORI BAR, TAMPA

THE HOLLYWOOD ROOSEVELT, LOS ANGELES



SABOR UNIDO, NEW JERSEY

WHAT OPERATORS SAY

"We're loving the station. It's fantastic. ... The station's been really incredible, and ... it's wearing very well for having been in operation. We do quite high volume in this outlet."

JUSTIN R., BAR MANAGER, CONRAD

ORLANDO, FL

"Staff feel better at the end of each shift, less back pain and leg pain due to the ergonomic orientation of the system. ... Working side by side with fellow bartenders in the same system doesn't feel overly crowded."

DANNY G., 88" STATION, TRUSTPILOT REVIEW

UNITED STATES

"The bartenders did a great job. ... We use the same staffing company for bartenders all the time, and they were really loving the bars."

KILEY E., POWERHOUSE ARTS

BROOKLYN, NY

"You guys are awesome. ... We really love the piece. It's definitely exactly what we needed."

NICOLE S., CREATIVE CORKS

CONNECTICUT

"Since we installed the Kobayashi station at our bar, all of our bartenders prefer working at this station over our older setup."

THOMAS S., PARCELLE WINE BAR

NEW YORK, NY

"We replaced our entire underbar setup with Kobayashi. The build quality is incredible and the team helped us design the perfect layout."

XHAO Z., RESTAURANT SHIKI

ROTTERDAM, NL

"We added a Kobayashi station to our restaurant and bar and it's been a great investment. The efficiency is obvious from day one. Other bartenders who come in as customers keep asking if we're hiring."

LUIZ C., SABOR UNIDO

NEW JERSEY

"Those two 65 inches work perfect."

DALLAS R., CARIS

LEXINGTON, KY

"I can just see that the quality is crazy. ... It's a beautiful station."

DAVID K., KRG HOSPITALITY

LAS VEGAS, NV

"I like your product better because I think it's simple. ... I like your stuff better."

MARIUS, CHAMPION DEVELOPMENT

NEW YORK

"They're beautiful."

JEFFREY L.

CALGARY, AB

"I noticed in looking at your stations, they seemed a little, maybe easier to clean. ... I thought these look nice."

NOAH S., WE ALL GOTTA EAT GROUP

MASSACHUSETTS

LIST PRICES

BAR STATIONS

88″ Standalone KC-88-S1	**$9,250**
65″ Standalone KC-65-S1	**$7,500**
52″ Standalone KC-52-S1	**$5,950**
65″ Drop-In KC-65-D1	**$6,850**
52″ Drop-In KC-52-D1	**$5,590**
Portable conversion kit ACC-PORTABLE-CONV	**+$2,500**

DRINK RAILS

39.37″, 4.72″ / 8″ face KC-39-DR / DR8	**$500 / $1,000**
52″, 4.72″ / 8″ face KC-52-DR / DR8	**$650 / $1,300**
65″, 4.72″ / 8″ face KC-65-DR / DR8	**$850 / $1,700**
88″, 4.72″ / 8″ face KC-88-DR / DR8	**$1,000 / $2,000**
90° corner rail DR-CNR	**$950**

TRAYS

Drip tray 600 × 600 mm KC-DT600	**$575**
Beer and coffee tray KC-DT1300	**$1,500**
Full grate option	**+$500**

REFRIGERATION

Refrigerator, 1 / 2 / 3 door KC-REF-900 / 1200 / 1800	**$2,000 / $2,500 / $3,000**
Black bar cooler, 1 to 4 door KC-REF-BLK 1D-4D	**$2,000 to $4,000**
Freezer, 1 / 2 / 3 door KC-FRZ-900 / 1200 / 1800	**$2,495 / $3,195 / $3,795**

ACCESSORIES

Ice chest cover, 2 / 3 piece ACC-ICC-2PC / ACC-ICC	**$199 / $249**
Ice chest divider ACC-ICD	**$150**
Glass rinser ACC-GR	**$50**
Laser-cut logo setup ACC-LOGO	**$300**

HOW PRICING WORKS

- USD list prices, before trade or project pricing
- Freight quoted per project, shipped LTL on a pallet
- Sales tax where applicable
- A deposit locks your production slot
- Financing available
- 30-day money-back guarantee

Ask about trade and multi-unit project pricing.

BUILT FOR THE TRADE

Spec it once. We handle the layout, the quote and delivery on your timeline.

CONTRACTORS

Cutout and rough-in dimensions on every spec page

Delivery planned around your build

DESIGNERS

One consistent station family to specify

Custom logo and custom rail lengths

HOSPITALITY GROUPS

The same setup across every location

Project quotes for multi-unit orders

TWO WAYS TO START

01 SUBMIT YOUR PROJECT TO GET A QUOTE

Send the floor plan. We lay out the bar and quote it.

kobayashibar.com/bar-plan

02 DESIGN IT YOURSELF

Build the bar in 3D and send it to us for pricing.

kobayashibar.com/bar-builder-tool

JOIN OUR TRADE PROGRAM

Trade pricing and referral payouts for contractors, designers and bar consultants.

kobayashibar.com/trade-program

KOBAYASHI
WORKFLOW ENGINEERING

KOBAYASHI WORKFLOW LLC

CONTACT

t. +1 424-395-2929

e. info@kobayashibar.com

w. www.kobayashibar.com

FINANCING AVAILABLE
30-DAY MONEY-BACK GUARANTEE
LIFETIME STRUCTURAL GUARANTEE